Title of Invention

Tracking and Distress Message Sending System for Local Small Fishing Vessels

Technical Field of the Invention

The present invention relates to maritime safety, tracking, and emergency communications. More specifically, it concerns a GSM-based location and distress messaging system designed for small fishing vessels (SFVs) using locally available components, solar-assisted power, and buoyant protective enclosure.

Background of the Invention

Small fishing vessels in the Philippines typically operate within 20–25 km from shore where GSM coverage is still available, yet commercial safety devices such as EPIRBs, AIS SARTs, and GMDSS systems remain too costly, complex, and training-dependent for local fishermen. Prior art like US 8674853 discloses sophisticated maritime distress technologies involving satellite links, AIS functions, hydrostatic EPIRB release, and multiple automated triggers, but these are designed for large SOLAS-regulated ships and are not optimized for low-cost, GSM-based, municipal-range use. These existing systems are power-intensive, expensive, and incompatible with locally available consumer-grade components. As a result, small fishing vessels lack an affordable and practical means of distress signaling and tracking. The invention addresses this gap by providing a simple, energy-efficient, GSM-only device—solar-powered, push-button activated, locally manufacturable, and capable of basic tracking and data logging—tailored specifically for the needs and constraints of municipal small-scale fisheries.

Summary of the Invention

To offer an affordable, energy-efficient, and autonomous tracking and distress alert system that can be deployed widely in small fishing vessels using solar-assisted power and consumer-grade electronic components.

Brief Description of the Drawings

Figure 1: System architecture of the preferred embodiment

Figure 2: Block diagram of GSM-GPS-MCU integration

Figure 3: Layout of solar-assisted power system

Figure 4: Internal arrangement of sensors and recording modules

Figure 5: Flowchart for SOS message transmission

Figure 6: Buoyant enclosure design

Detailed Description of the Invention

Figure 1 illustrates the system architecture of a Tracking and Distress Message Sending System for Local Small Fishing Vessels. The system is housed in a compact enclosure (100) and integrates multiple functional modules coordinated by a microcontroller unit (MCU), such as an Arduino-based controller.

A GPS module (102) provides real-time geolocation data to the MCU, enabling continuous tracking of the vessel's position. A GSM communication

module (103) interfaces with the MCU to transmit periodic status updates as well

as emergency short-message-service (SMS) alerts via mobile networks. The MCU also governs a Timed TX/SOS module, which triggers automated distress messages when predefined conditions are detected or after a specific interval.

An ultrasonic sensor module (104) supplies environmental or proximity measurements that may relate to collision detection or sea condition monitoring.

An audio/video module (105) records supplemental situational data and stores it through a dedicated MicroSD storage unit (110) for post-event review or logging.

For power sustainability, the system incorporates a solar panel (106) connected to a charging circuit (111) that regulates energy delivery to the internal battery and system electronics. The MCU logs sensor outputs and

operational data (107) and ensures reliable SMS output during both normal reporting and emergency activation (108). The architecture is optimized for small fishing vessels requiring low-cost, autonomous tracking and distress-signaling capability.

Claims

1. A tracking and distress message sending system for small fishing vessels comprising:

a buoyant enclosure configured to sealed the system;

a microcontroller unit (MCU) configured to receive, transmit, acquire, store and process data of the system;

a global positioning system (GPS) module connected to the MCU configured to generate the actual or real-time location;

a GSM communications module connected to MCU and configured to transmit SMS data of the generated real-time location to a designated recipient;

an ultrasonic sensor connected to the MCU configured to detect distance, obstacle collisions, explosions and environmental hazards;

an audio and video recording subsystem connected to MCU to capture multimedia data; and

a solar charging circuitry connected to the MCU to regulate and distribute power to the system.

2. The system of Claim 1, wherein said MCU includes a manual SOS button configured to trigger an immediate distress SMS containing real-time GPS coordinates.

3. The system of Claim 1, wherein the ultrasonic sensor provides proximity data detected to the MCU that is appended and transmitted via SMS messages every 10 seconds.

4. The system of Claim 1, wherein the audio and video recording subsystem includes a removable memory card that continuously record and store data.

5. The system of Claim 1, wherein the solar charging circuitry comprises a lithium- ion battery pack and at least one photovoltaic panel configured to recharge said battery pack.

6. The system of Claim 1, wherein the buoyant enclosure provides positive buoyancy without requiring an emergency position-indicating radio beacon release mechanism.

7. A method for tracking and distress messaging for small fishing vessels comprising:

acquiring GPS coordinates;

transmitting said coordinates via SMS at timed intervals;

monitoring sensor input;

recording audio and video; and

administering solar-assisted battery management.

8. The method of Claim 7 further comprising sending an SOS SMS upon manual button activation.

9. The method of Claim 7 wherein the system operates solely through terrestrial GSM signals within 20–25 km from coastline.

10. A low-cost distress and tracking device for small fishing vessels utilizing locally available components including Arduino-compatible microcontrollers, GSM modules, GPS receivers, ultrasonic sensors, and consumer-grade recording devices.

Tracking and Distress Message Sending System for Local Small Fishing Vessels

Abstract of the Disclosure

The invention relates to a low-cost maritime safety device for small fishing vessels (SFVs) operating within municipal waters. The system integrates a microcontroller, GPS receiver, GSM communication module, ultrasonic sensor, audio/video recorder, and solar-assisted rechargeable power source enclosed in a buoyant waterproof casing. The device periodically transmits vessel coordinates through SMS to a designated monitoring center and activates a distress message upon manual trigger using an emergency button. The system also performs continuous sensor, audio, and video logging for safety documentation and post-event analysis. Designed for affordability and local manufacturability, the invention provides essential tracking and emergency alert capabilities for SFVs that lack access to satellite-based distress systems, EPIRBs, and AIS units. The system is optimized for GSM coverage zones up to 25 kilometers from shore and addresses the gap in accessible maritime safety technologies for small-scale fisherfolk.

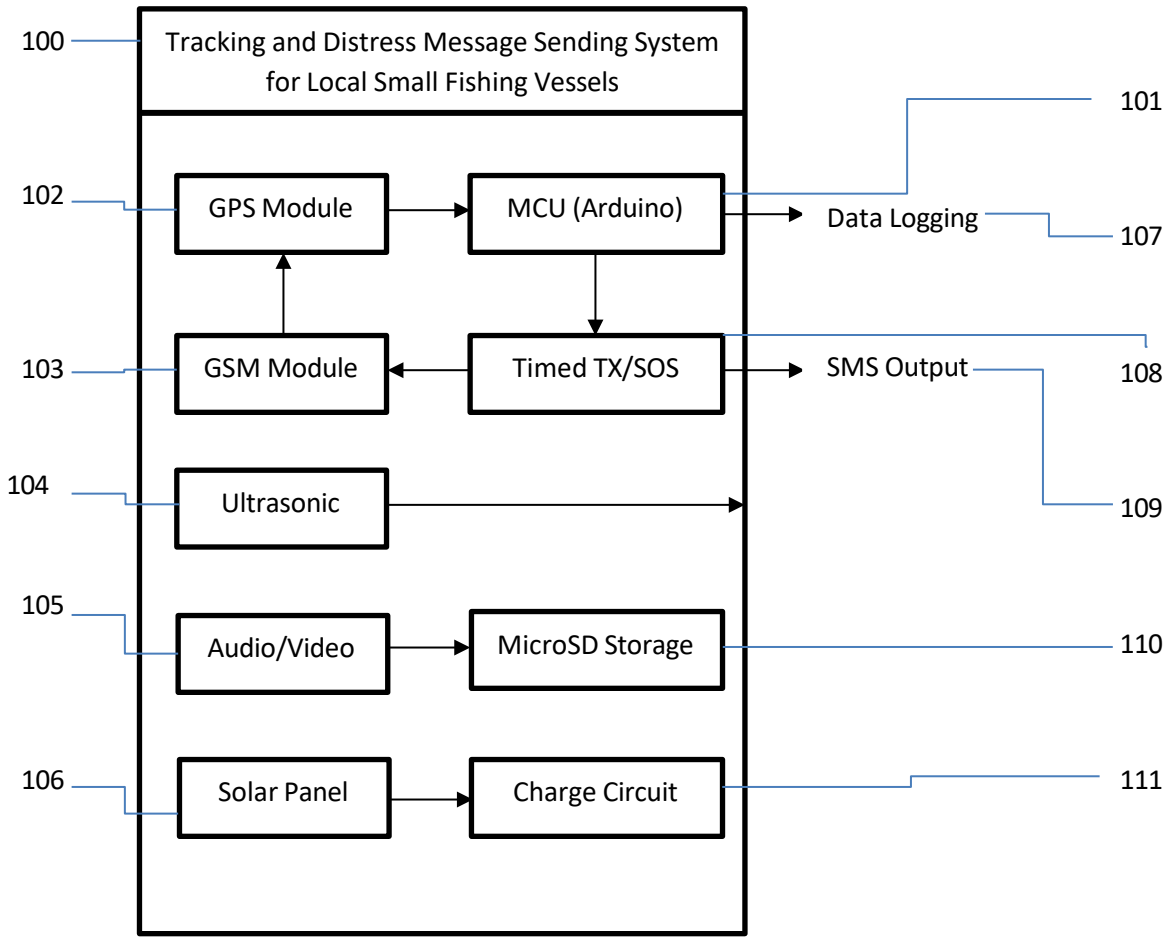

FIGURE 1

BATANGAS STATE UNIVERSITY

Dr. LEANDRO A. DALHAG
Assistant Director, KTTM

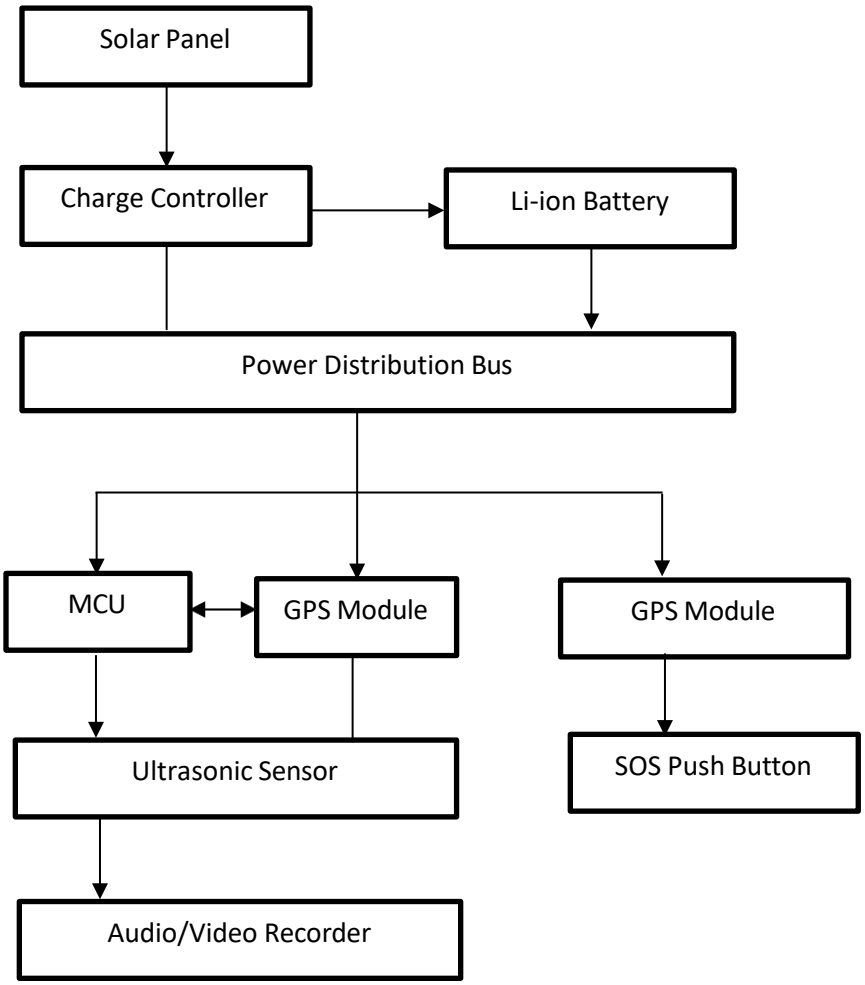

FIGURE 2

BATANGAS STATE UNIVERSITY

Dr. LEANDRO A. DALHAG
Assistant Director, KTTM

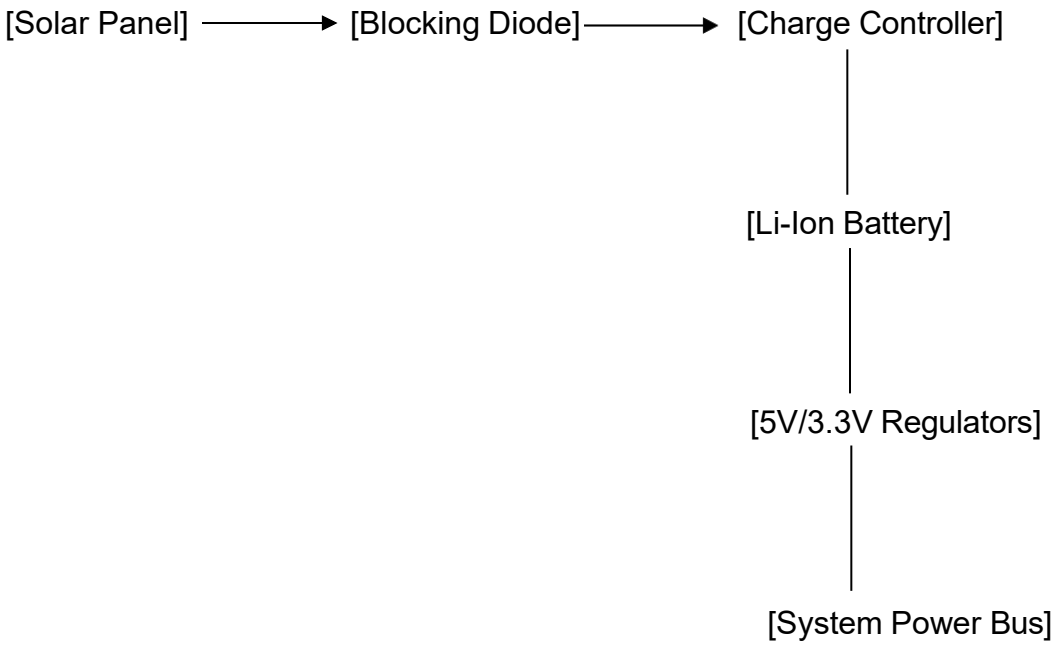

FIGURE 3

BATANGAS STATE UNIVERSITY

Dr. LEANDRO A. DALHAG
Assistant Director, KTTM

INTERNAL LAYOUT

Camera Module ---> Front Window Lens

Microphone ---> Acoustic Port

Ultrasonic Sensor ---> Downward Orientation

MicroSD ---> Mounted beside MCU for logging

FIGURE 4

BATANGAS STATE UNIVERSITY

Dr. LEANDRO A. DALHAG
Assistant Director, KTTM

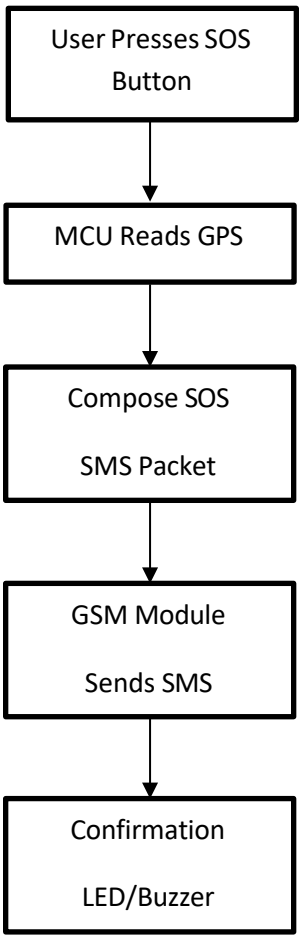

FIGURE 5

BATANGAS STATE UNIVERSITY

Dr. LEANDRO A. DALHAG
Assistant Director, KTTM

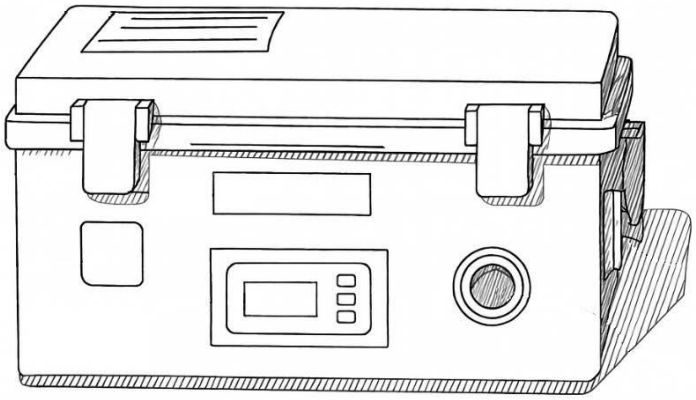

FIGURE 6

BATANGAS STATE UNIVERSITY

Dr. LEANDRO A. DALHAG
Assistant Director, KTTM